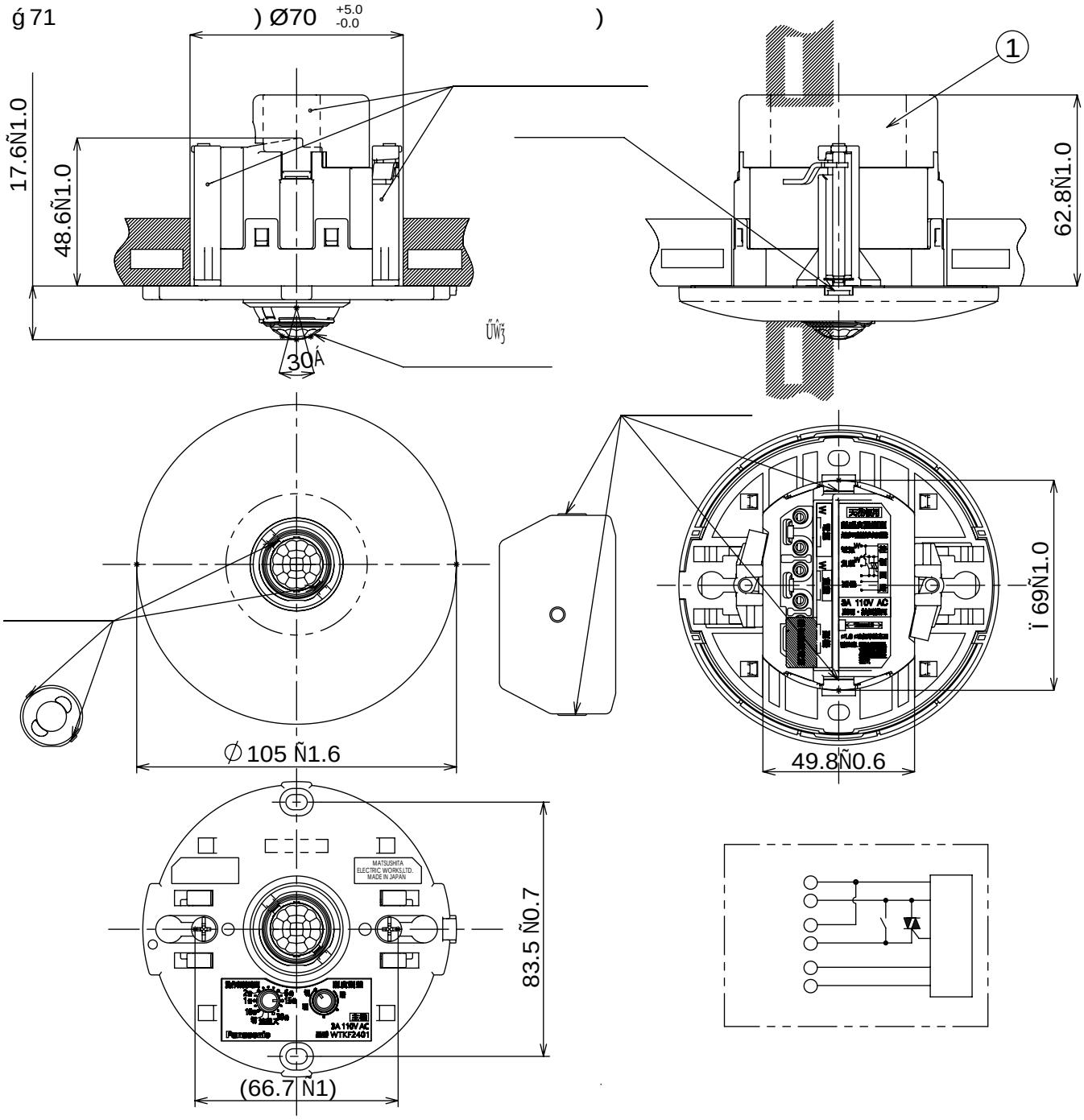

	3A 110V AC
	600V (IV) 600V (VVF) _ 1.6 _ 2.0
	( )( ) DC 12V WTKF2910

							WTKF2401		2018.04.16
									1:2
							( )( )( ) (10 ~30) ( )3A 110V AC		
1					1				
						( )			

CNS A-4 mm MATS-D-0204,29,170401

( )( )( )(10 ~30) ( )3A 110V AC ( ) WTKF2401						
nit	Restricted substances and its chemical symbols					
	Lead (Pb)	Mercury (Hg)	Cadmium (Cd)	Hexavalent chromium (Cr+6)	Polybrominated biphenyls (PBB)	Polybrominated diphenyl ethers (PBDE)
	-					
1. 0.1 wt % 0.01 wt % 2. 3.						

تن CNS15663 D.16 ( )